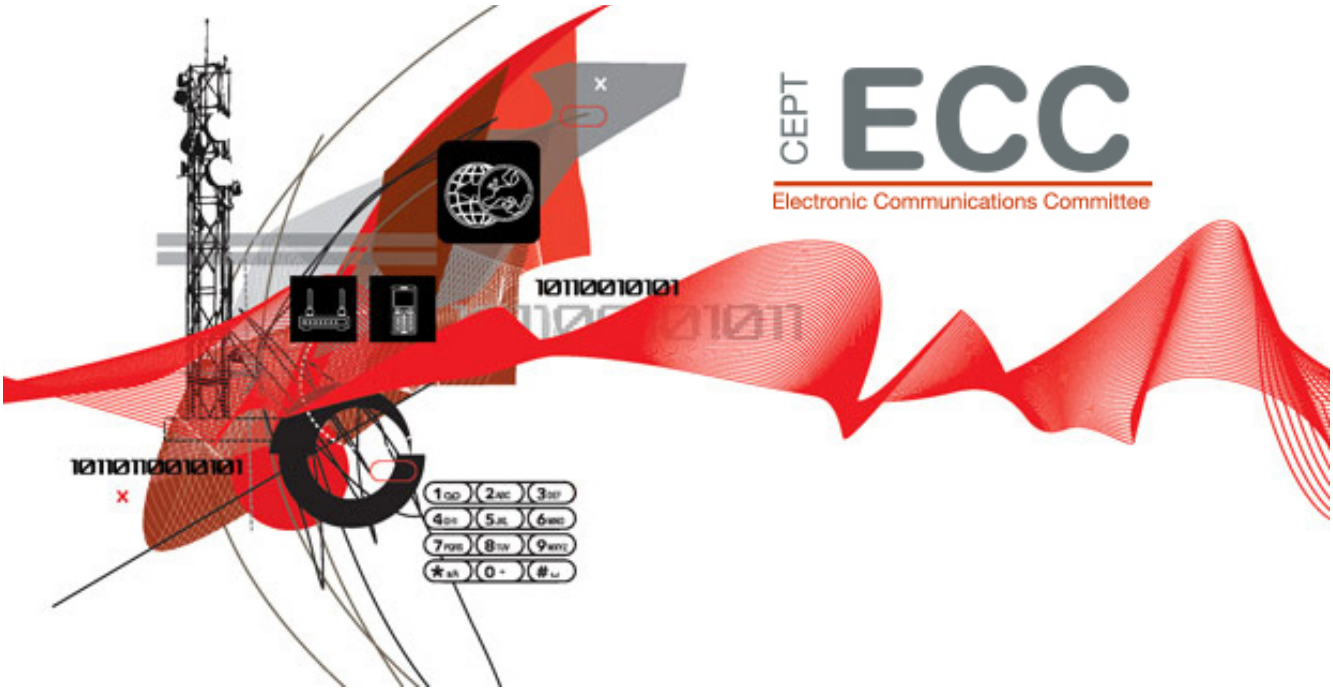

ECC Newsletter December 2022

Reaching new heights with satellite technology

A CEPT workshop in November discussed innovations in the satellite sector and the resulting regulatory challenges

Satellite technology has made huge strides forward in recent years. Improvements in launch capabilities and reduction in satellite sizes have made it easier for new applicants to enter the arena.

As a result, the satellite market has changed dramatically over the past decade. It is no longer the domain of big government agencies and large corporations only. Smaller companies are getting in on the act.

As with every burgeoning industry, this has thrown up challenges for regulators and greater demands for the use of spectrum. In Europe, the Electronic Communications Committee (ECC) has adapted to the growth of the sector by creating new regulations – at a European Conference of Postal and Telecommunications (CEPT) level and globally within the International Telecommunication Union (ITU) framework.

In November, CEPT hosted a workshop to address the technical and regulatory challenges raised by new satellite technologies and applications.

This was one of the first major in-person workshops to be hosted since the pandemic. Some 150 people converged on a hotel in Copenhagen in Denmark, while the event was also streamed online, with 200 people registering remotely.

What was particularly relevant about this workshop was the diverse range of views that were heard – from regulators, standards organisations and industry alike. Both well-established satellite operators and start-ups were represented.

Presentations were received from both long-established satellite operators, as well as more recent entrants to the market included from the start-up sapce. Over the course of a day and a half, and nine sessions, the presentations were insightful, and the debate that followed was robust.

The changing face of satellite technology

There are three main types of earth orbiting satellites. Geosynchronous Orbit (GSO) satellites move on a path that is parallel to earth and appear stationary in the sky, at an altitude of around 36,000 km. Medium earth orbit (MEO) satellites orbit the earth at a lower altitude, from around 5,000 km to 12,000 km. Meanwhile, low earth orbit (LEO) satellites occupy the range below around 2,000 km.

Many of the new satellite IoT systems that are being planned for the market are based on smaller LEO satellites. “Megaconstellations” of large numbers of LEO satellites are either under development or already providing service.

The workshop heard of how satellites are being used to enhance people’s lives around world – whether that is providing broadband in rural areas or assisting emergency services in their work. In addition, there is increasing demand for ubiquitous connectivity on the move, for which ‘earth stations in motion (ESIM)’ on-board aircraft, ships and land vehicles play an important role.

As one contributor put it, “space is the future for communications on Earth”.

Spectrum regulation

The workshop explored whether the current ECC frameworks are suitable to meet the challenges of the satellite sector.

First generation large constellations, which are in use, use frequencies in the Ku- (10.7-14.5 GHz) and Ka-bands (17.3-30 GHz), which provide satellite connectivity. Future generation large constellations plan to use the Q/V-bands (37.5-52.4 GHz).

Spectrum sharing is an important component of the satellite regulations. Speakers called for conditions that “accurately reflect planned operations of non-geostationary orbital (NGSO) systems”.

The workshop heard that, while there is need for improvement, CEPT is doing lots of things right when it comes to regulation, and the ECC framework is also influential for other regions outside CEPT. However there were some frustrations expressed over the length of time it takes for regulations to be implemented on a national basis, as well as the availability of up-to-date information on this implementation status.

The workshop heard that it "takes about two years of rigorous work to produce the ECC Decisions and ECC Reports" and "a robust framework is needed to ensure that the satellite systems do not cause harmful interference to other services".

It was argued that ITU Radio Regulations and ITU-R Recommendations should be updated to reflect the changing technology – one contributor pointed out that some regulations are based on work from 1997 to 2003.

The growth in the number of satellites will mean that spectrum is often shared, and the workshop heard that it is important that rules must be based on "realistic scenarios" and respecting ECC decisions and World Radiocommunication Conference (WRC) outcomes.

The increasing convergence of satellite and mobile technologies was noted by several contributors. In the past these two had often been rivals for the same spectrum, but satellite integration is now seen as increasingly important for future generations of mobile technology including 6G.

The use of satellites to provide connectivity in existing terrestrial spectrum bands was also discussed, including the possibility of direct connections to existing mobile phones, and the possibility of hybrid networks for Internet of Things (IoT) devices. These systems could provide significant extension of coverage to remote areas, but they also raise a series of regulatory questions.

Contributors called for governments to provide assurances of stability and spectrum availability.

"ITU Radio Regulations are necessary to avoid harmful interference between NGSO and GSO systems", one said.

On the other hand, there were also views that regulations need to be sufficiently flexible to allow for experimentation and innovation.

While some work has been done on harmonising standards for satellite earth station terminals, contributors called for greater harmonised satellite spectrum. This is essential, they said, for undisrupted use of service. For example, the on-the-move vehicle driver travelling across Europe will benefit from harmonised satellite spectrum.

ESIM play an important role in operating NGSO systems, as they serve moving platforms such as aircraft. One contributor said that allowing wider access to spectrum for NGSO ESIM in the Ka-band will provide a “much required harmonised international framework” and will protect existing areas.

Beyond spectrum

Spectrum isn’t the only issue facing operators in space. The workshop heard that more than 25,000 objects, larger than 10 cm in size, are flying around space. Collisions can lead to more orbital debris. Likewise, the more satellites in space, the more obstacles which can cause disruption for astronomers researching it.

The ITU Plenipotentiary Conference (PP-2022) adopted a resolution to address the issue of “enabling sustainable, efficient, and equitable use of the orbital and frequency resources”.

The challenge for regulators when it comes to dealing with requests for market access is to strike a balance around accommodating new satellite solutions while solving sustainability issues.

Bringing regulation to the World

With the WRC-23 fast approaching, it was unsurprising that it featured prominently at the CEPT workshop.

Satellites will be a major topic for discussion at WRC-23 – with huge debate expected and “controversial decisions” at the conference. The current satellite-related agenda items have largely originated from the CEPT proposals.

At present, CEPT is in the process of developing positions for the conference. European Common Proposals for WRC-23 will begin to be approved in May. The workshop heard that CEPT’s position is to protect the existing satellite usage, to strengthen existing spectrum and to allocate new spectrum for satellites.

As the workshop ended, it was agreed that while a lot of work has been done around regulation, there is still more to do if the satellite sector is to flourish.

Next generation emergency communications

Vassil Krastev, ECO Numbering and Networks Expert, explores the need for a new IP-based emergency communications network and how emergency services and citizens will benefit from the technological migration from circuit-switched to packet-switched technologies

Emergency services provide immediate and rapid assistance in situations where there is, in particular, a direct risk to life or limb, to individual or public health or safety, to private or public property, or to the environment. The common number in Europe to reach emergency services is the single European emergency number 112, which functions alongside other existing national emergency numbers, although some countries have opted for 112 as their only national emergency number.

Figure 1 [source: www.digit.in]

The traditional method to reach emergency services, including police, fire brigade and ambulance, is the number-based, telephone-based 112 call from fixed and mobile phones. The 112 call connects to a so-called Public Safety Answering Point (PSAP) where an emergency communication is first received with the goal to request and receive emergency relief from emergency services.

A specially-trained PSAP operator will answer the emergency call and either respond directly or transfer the 112 call to the most appropriate emergency service depending on the national organisation of emergency services.

Technological migration

In recent years technological developments have opened up new possibilities for end-users to access emergency services not only by traditional telephony (circuit-switched) but also using new technologies such as Voice over Internet Protocol (VoIP). This is due to the phasing out of 2G and 3G legacy networks and the transition from circuit-switched to packet-switched network technology.

Moving to all-IP communications will have many benefits: it will allow emergency services to leverage the potential of using applications and it will enable end-users to use various means of voice, text and video communications. Importantly, it will also enable PSAPs to provide the emergency services with relevant contextual information conveyed by the end-user or derived and transmitted automatically from the end-user's device or network. For example, from the handset they will be able to derive caller location information based on advanced mobile location; while from the network, they will get the address of the calling party or the cell/sector ID, depending on whether the user is on a fixed or mobile network.

The Electronic Communications Committee's (ECC) Working Group Numbering and Networks (WG NaN) addressed the issue of migration to IP-based networks in ECC Report 265. The report provides a technical overview of the migration to IP-based networks, which should enable regulators and other stakeholders to better understand the challenges of this important technological step. It also addresses location information for emergency calls which could be affected by the transfer of traditional services, such as voice, to IP.

Although voice communication to 112 is the main means of access to emergency services, the technological migration from circuit-switched to packet-switched technologies enables alternative enhanced methods of access to emergency services. These are particularly relevant for end-users with disabilities and may include text and video-based services which cannot be supported by the legacy 2G/3G networks. The existing, legacy PSAP and emergency services infrastructure is not designed in a way that enables interaction with enhanced services, or that current and future communications and operational requirements will be met. Simply put, the PSAP and emergency services infrastructure has not kept up with technology, thus, is not able to provide the level of service that citizens expect.

In the context of the technological migration to all-IP networks, national PSAP systems and emergency services need to evolve and be able to receive, answer and process emergency communications through packet-switched technology.

In terms of emergency caller location information, ECC Report 225 provides a comprehensive overview of the various technological possibilities to obtain emergency caller location information and to provide that information to the PSAP. Caller location information in VoIP networks has also been addressed in ECC Report 193, while ECC

Report 301 addresses technical aspects of providing caller location information from private/corporate networks using IP-based protocols and work- around solutions that may be implemented where legacy network technology is used.

European legislation

The entry into force of the European Electronic Communications Code (EECC) acknowledges these technological developments by introducing a significant change in vocabulary. Previous references to "emergency calls" have now been replaced by the term "emergency communications" defined as "means of communication, that includes not only voice communications services, but also SMS, messaging, video or other types of communications, for example real time text, total conversation and relay services" (Recital 285, EECC).

Moreover, Article 109 'Emergency communications and the single European emergency number' of the EECC provides the conceptual framework for emergency communications covering several distinct aspects including:

- Free-of -charge access to emergency services through emergency communications;
- The establishment and provision of caller location information;
- Equivalent access to emergency services for end-users with disabilities;
- Routing of emergency communications to the most appropriate PSAP;
- Continuous access to emergency services while roaming in the European Union.

In order to ensure effective access to emergency services through emergency communications to the emergency number 112, Article 109 (8) places an obligation on the European Commission to adopt delegated acts, after consulting the Body of European Regulators for Electronic Communications (BEREC), supplementing paragraphs 2 (routing to the most appropriate PSAP), 5 (equivalent access for end-users with disabilities) and 6 (establishment and provision of caller location information) of Article 109. In doing so, it takes the measures necessary to ensure the compatibility, interoperability, quality, reliability and continuity of emergency communications in the EU. The first such delegated act shall be adopted by 21 December 2022.

The need for a new IP-based emergency communications network

In response to technological development, a new technical architecture for a future IP-based emergency communications network was first introduced in the United States by the National Emergency Number Association called Next Generation 911 (NG911).

In 2013, the European Emergency Number Association published a document, entitled Next Generation 112 - Long Term Definition, which describes the core concept of a Next Generation 112 architecture - the Emergency Services IP Network (ESInet).

ESInet is an emergency services network of networks that utilises IP technology. ESInets are private, managed, and routed IP networks. An ESInet can serve a set of PSAPs, a region, a state, or a set of states. ESInets may be interconnected and have to be built upon common functions and interfaces, which makes them interoperable.

Based on the core concept of the Next Generation 112 architecture, the European Telecommunications Standards Institute(ETSI) defined the core elements and corresponding technical interfaces for network independent access to emergency services (Figure 2) in its technical specification ETSI TS 103 479 V1.1.1 (2019-12).

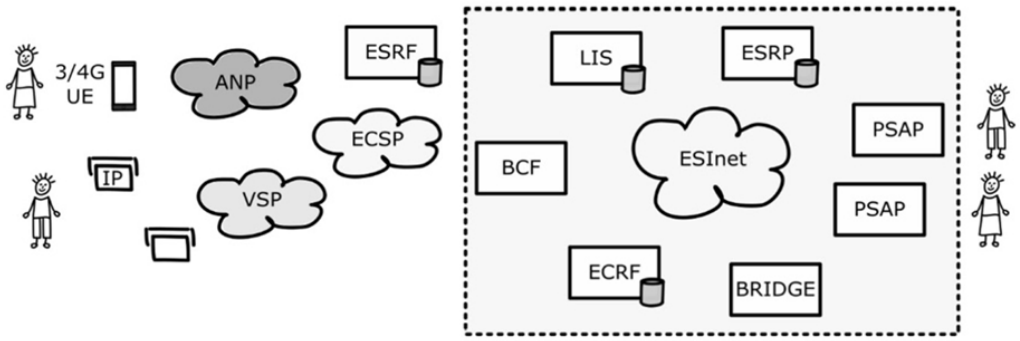

Figure 2 Core elements for network independent access to emergency services [source: ETSI TS 103 479]

All PSAPs will have to be able to handle calls originated by different types of networks, such as over- the-top (OTT) VoIP providers, 3GPP IP Multimedia Subsystem (IMS) networks, enterprise networks, as well as legacy circuit switched networks. Not all PSAPs will be compatible or upgraded with next generation capabilities at the same time, which makes gateways, such as the Legacy PSAP Gateway, crucial elements in the architecture. This architecture enables citizens to contact emergency services in different ways, using the same types of technology as those they use to communicate every day. It also enables PSAPs to receive contextual information about emergencies of all magnitudes and improves interoperability between PSAPs and emergency services.

Emergency calls originating in an access network provider infrastructure are forwarded via a voice service provider to an emergency call service provider where the appropriate PSAP or, in general terms, the point-of-interconnect to a PSAP service provider (PSP)

infrastructure is determined. In general, emergency calls are routed by the emergency service routing function to the emergency service routing proxy via a border control function. Depending on national PSAP models the proxy may then forward directly to the appropriate PSAP, using an interface or PSP internal facilities to determine the correct PSAP. The above architecture (Figure 2) introduces functional elements that comprise an IP-only PSP environment. Such elements provide security measures such as border control function, location information service and emergency call routing. They also map PSAP boundaries to the emergency call routing function (ECRF), bridging (BRIDGE) and call processing equipment (PSAP).

Next steps

All stakeholders in the emergency communications handling chain in Europe – including terminal equipment providers, electronic communications network and service providers, solutions providers/integrators, PSAPs and the emergency services – will need to invest in new infrastructure, processes and procedures to meet the various regulatory requirements of inter-alia the EECC, its supplementing delegated regulations and the European Accessibility Act.

ECC's WG NaN recently agreed on a new ECC deliverable to be added to the work programme of its project team on emergency communications - ECC Report on Next Generation 112. The ECC Report will evaluate the technological potentials, regulatory requirements and the possible applications or use cases of Next Generation 112. It will look at the potential challenges in terms of funding, supply chain for 112 emergency communications and the phasing out of 2G/3G. Other challenges will also be examined, including the impact of the introduction of Next Generation 112 and whether there is legacy support for certain devices. Accessibility and equivalence in access to emergency services will also be considered, as will prioritisation of emergency calls in a packet-switched

environment. Furthermore, the ECC Report will look at how caller location information can be enhanced, and how emergency communications are routed to the most appropriate PSAP based on the caller's location.

ECC steps up its aims to harmonise 5G in millimetre wave bands

Peter Faris, ECO Spectrum Expert, explores recent developments from the Electronic Communications Committee regarding harmonisation for 5G in millimetre wave frequency bands at 40.5-43.5 GHz and 66-71 GHz

Harmonisation: a recent history

As explored in previous newsletters, in recent years the Electronic Communications Committee (ECC) has developed harmonisation measures for 5G in several frequency bands.

These include the "pioneer bands" of 3.4-3.8 GHz and 24.25-27.5 GHz, as well as existing mobile bands below 3 GHz. Such initiatives have enabled the successful initial rollout of 5G networks across the CEPT region.

In order to meet further demand for high capacity deployments requiring large contiguous blocks of spectrum, particularly in urban areas, the ECC has continued work to harmonise additional "millimetre wave" bands. "Millimetre wave" broadly refer to spectrum above 24 GHz, where wavelengths are of the order of ~10 mm and below.

The properties of the high frequencies in the millimetre wave range mean that signals can only propagate over short distances – in the order of tens of metres. This provides opportunities for delivery of high capacity connectivity for urban hotspots while ensuring sharing with other users. This opportunity for sharing has been recognised as an area of focus within the CEPT Roadmap for 5G and beyond.

At the 2019 World Radiocommunication Conference (WRC-19), it was agreed to identify the bands 24.25-27.5 GHz, 40.5-43.5 GHz and 66-71 GHz for International Mobile Telecommunications. The 24.25-27.5 GHz band had already been harmonised by CEPT in 2018. In early 2020, the EC issued a mandate to CEPT to develop relevant harmonisation conditions for the 40.5-43.5 GHz and 66-71 GHz bands.

Reviewing regulations for 66-71 GHz

The 66-71 GHz band had already been harmonised within the ECC and EC framework for short range devices – in 2019. In particular, wideband data transmission systems, more commonly known as "WiGig", were harmonised through existing technical conditions in ERC Recommendation 70-03 and the EC Decision for SRD (EU) 2019/1345.

CEPT Report 78, published in April 2021, concluded that these existing regulations were suitable for provision of 5G systems. This was under the assumption that 5G would operate under the current general authorisation framework and would implement appropriate technical conditions to coexist with other usage in the band.

This was also in line with the conclusions from WRC-19 that recognised the need for equitable access for existing technologies, taking into account the sharing opportunities in this frequency range. It meant that short range urban 5G deployments could be deployed without a significant risk of interference to WiGig systems operating in the same band.

How 40.5-43.5 GHz can coexist with other systems

Development of harmonisation conditions for the 40.5-43.5 GHz band proved a more complicated task. There were two main reasons for this. Firstly, there were no existing regulations for terrestrial systems in this band. Secondly, there was a need to ensure coexistence with other systems, including fixed-satellite service (FSS) systems operating both within the band and in the adjacent band below 40.5 GHz, as well as fixed service (FS) and radio astronomy service (RAS) within the band. These issues required additional studies.

ECC PT1 commenced work on this activity in mid-2020. Due to the need for complex technical studies and discussions, coupled with the backdrop of the challenges of remote working during the early stages of the COVID-19 pandemic, it became clear it would not be possible to conclude the work in time for the original deadline set out in the EC Mandate of July 2021. The EC agreed to an extension of the timeline due to the exceptional circumstances. ECC PT1 continued its discussions while working remotely during 2020 and 2021, and was able to conclude the work during 2022 with the resumption of physical attendance at meetings.

The work on this band was finalised at the recent 60th ECC plenary meeting in November with the approval of four separate deliverables – CEPT Report 82, ECC Decision (22)06, ECC Recommendation (22)01 and ECC Recommendation 22(02).

CEPT Report 82 identifies harmonised technical conditions for mobile systems in the 42 GHz band and addresses sharing and compatibility conditions to ensure protection of other users of spectrum in the 40.5-43.5 GHz frequency band (FS, RAS and FSS) and in adjacent bands (FSS, FS). ECC Decision (22)06 contains harmonised technical conditions aligned with CEPT Report 82.

The technical conditions are complemented by the ECC Recommendations which set out guidance to administrations on ensuring coexistence with satellite systems both within the band and in the adjacent band.

ECC Recommendation 22(01) addresses the in-band case of coexistence with receiving FSS earth stations in 40.5-42.5 GHz, as well as transmitting FSS earth stations in 42.5-53.5 GHz, while also ensuring the possibility for future deployment of these earth stations.

ECC Recommendation 22(02) addresses the adjacent band case of coexistence with receiving FSS earth stations in 39.5-40.5 GHz, including guidance on prevention and resolution of possible interference issues.

5G and beyond

The finalisation of these deliverables represents an important milestone in facilitating the availability of spectrum in millimetre wave bands in CEPT countries, in order to enable the provision of high capacity 5G urban hotspots, while ensuring the protection of existing services. This also concludes one of the key objectives of the CEPT Roadmaps for 5G and beyond.